Rubrik 6.14
JIC - Female x JIC - Male

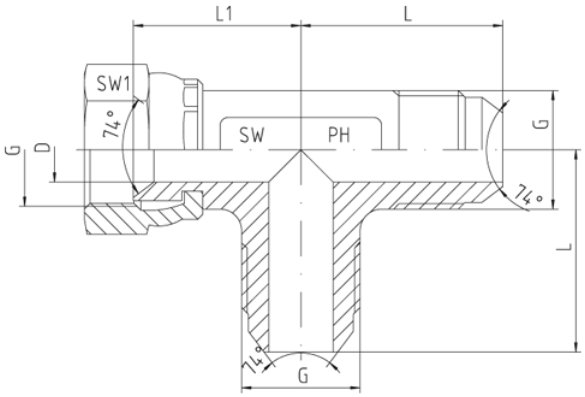

Swivel-Run-Tee DKJ - AGJ - AGJ

Pressure	Tube O.D.		Thread	Approx. Dimensions						Order-Code
PN	mm	in.	G	L	L1	D	SW1	SW		
350	6	1/4"	7/16"-20 UNF	22,5	16,7	4,0	17	12		1252516-04-04-04
350	8	5/16"	1/2"-20 UNF	24,0	17,5	5,5	17	14		1252516-05-05-05
350	10	3/8"	9/16"-18 UNF	27,0	22,3	7,5	19	14		1252516-06-06-06
350	12	1/2"	3/4"-16 UNF	31,0	24,5	10,0	24	22		1252516-08-08-08
350	14,15,16	5/8"	7/8"-14 UNF	37,5	29,5	12,0	27	24		1252516-10-10-10
350	18,20	3/4"	1 1/16"-12 UN	42,0	31,0	15,5	32	24		1252516-12-12-12
350	25	1"	1 5/16"-12 UN	46,0	35,7	21,5	41	36		1252516-16-16-16
210	28,30,32	1 1/4"	1 5/8"-12 UN	52,5	42,8	27,5	50	41		1252516-20-20-20
170	35,38	1 1/2"	1 7/8"-12 UN	59,9	47,2	33,0	55	50		1252516-24-24-24
150	50	2"	2 1/2"-12 UN	77,5	62,1	45,0	70	65		1252516-32-32-32

© PH Industrie-Hydraulik GmbH und Co. KG | Telefon: +49 (0) 2339/6021