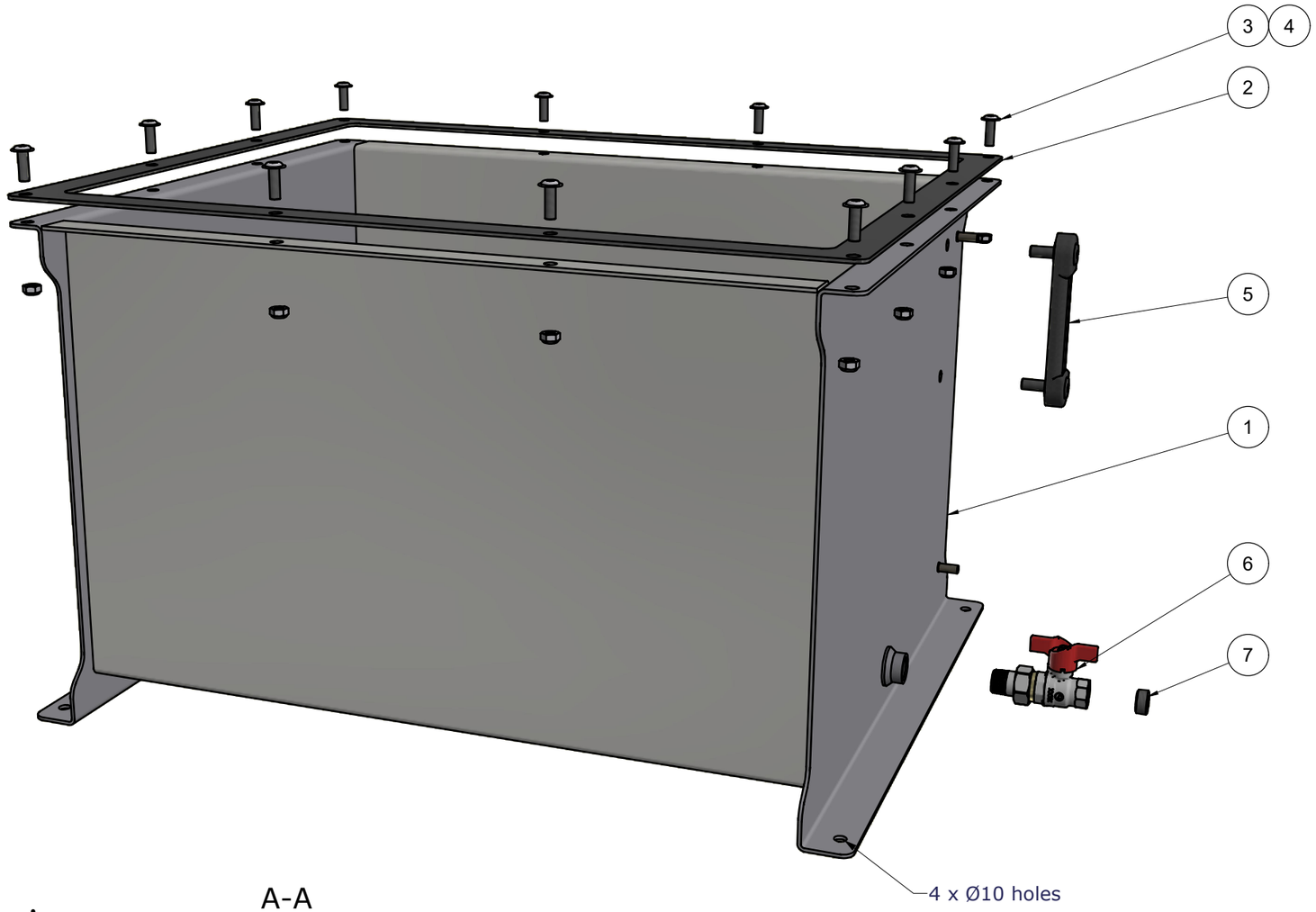

B-B

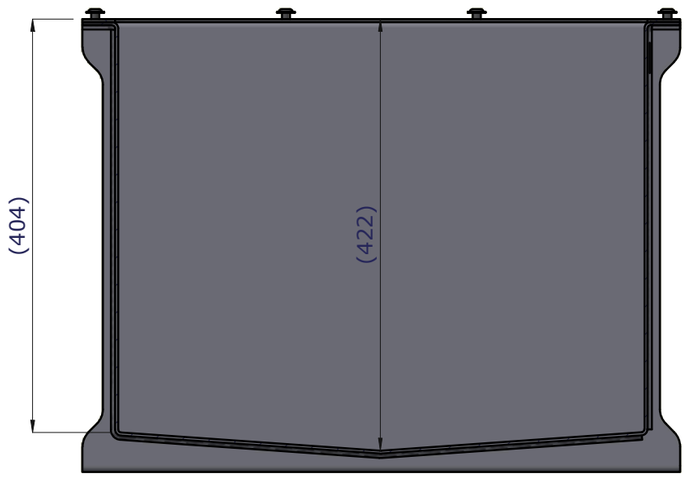

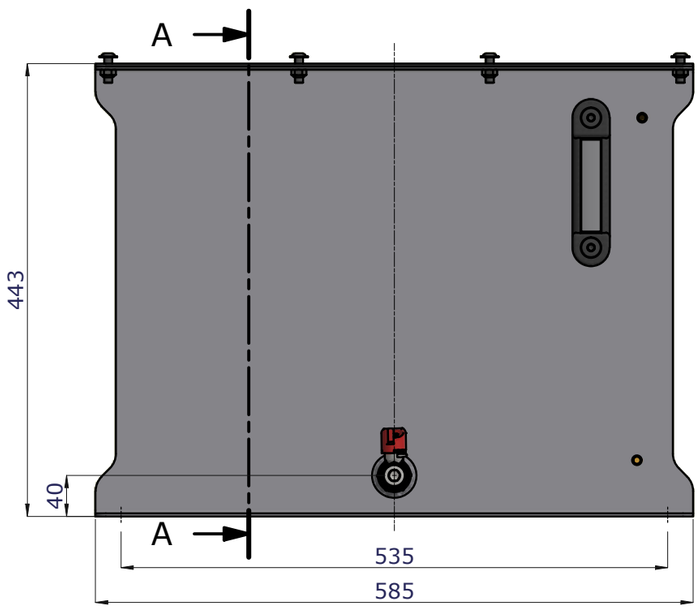

A-A

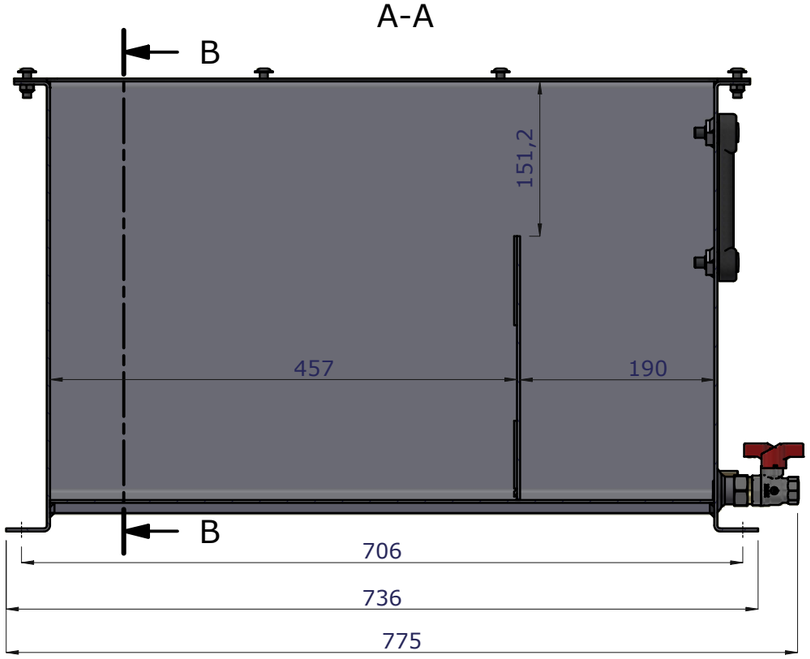

Parts List			
ITEM	QTY	PART NUMBER	DESCRIPTION
1	1	HGTA110	Main asm of tank
2	1	HGTA110SK	SEAL FOR 110-160-190 L TANK
3	12	ULSF5408025	M08x25 A2 buttonhead ISO7380-2 number 9084 - ULSF
4	12	9850208000	M08 FZB Lock nut DIN985
5	1	LVA20TAPM10	Level indicator 127/M10
6	1	KH52CE/3-004	Ball valve ½ inch
7	1	08BPU08-906	Plug 1/2 BSP without collar

Weight: 39,2 kg	Customer no.	Change no.	Created date: 10-09-2012	Created by: hero
Item description: HGTA 110L tank kpl. u/låg			Reviewed date: 12-05-2025	Reviewed by:
Hydra Specma	Format: A3	Proj.	Drawing no.: HGTA110KR00	Sheet: 1 /1
	Status: Approved		Item no.: HGTA110KR00	Rev.: A

Confidential information
This document is the property of HydraSpecma A/S and may not be copied or disclosed to any third party without prior written permission of HydraSpecma A/S.
HydraSpecma A/S reserves all patent, copyright, trade secret, and other proprietary rights to the content of this document.