UMETA TURNED PARTS ACCORDING TO SAE J-534

Plugs

- according to SAE J-534
- for subsequent closing of boreholes
- made of steel, zinc-plated, passivated and top coated
- salt spray resistance > 72 hours

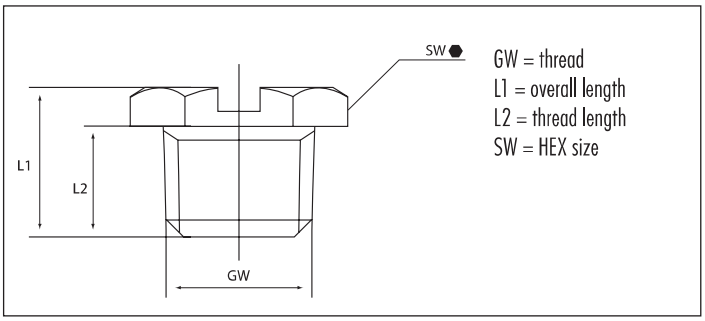

GW 1/4" - 28 UNF-2A Ref.- No.:

L1	L2	Thread	Steel	Alemite
1/4"	3/16"	5/16" HEX ⬢	5546138	328224

Plugs with Self-Forming Thread

- according to SAE J-534
- with self-forming thread, tapered
- standard version made of steel, hardened according to SAE (650HV) and yellow passivated
- salt spray resistance > 72 hours
- recommanded hole size = 0.02" below nominal width

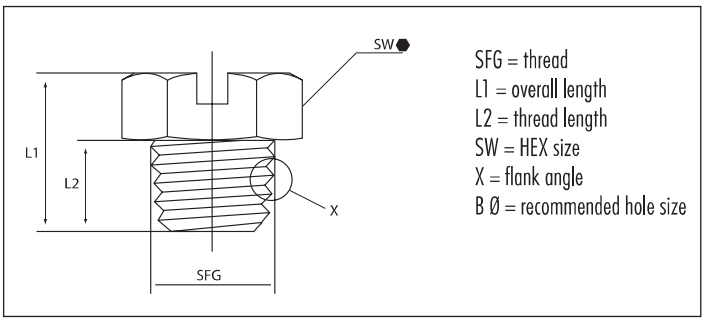

SFG 1/4" - 28 Special Taper Thread Ref.- No.:

L1	L2	for bore-Ø	SW	Steel	Alemite
21/64"	3/16"	0.230"-0.235"	5/16" HEX ⬢	5546140	328435

International Reference Chart

Ref.- No.: UMETA	Alemite	Page
5241043		74
5546006	1610-BL	71
5546008	1644-B	71
5546010	1607-B	71
5546012	1669-B	71
5546014	1684-B	71
5546016	1618-B	71
5546017	1688-B	72
5546018	1612-B	72
5546020	1623-B	72
5546022	1649-B	72
5546024	1613-B	72
5546026	1606-B	72
5546028	1627-B	71
5546030	1641-B	71
5546032	1652-B	71
5546034	1680-B	71
5546036	1698-B	71
5546038	3014-B	71
5546040	1637-B1	72
5546042	3010-B1	72
5546044	1911-B1	72
5546046	3038-B	73
5546048	3053-B	73
5546050	3054-B	74
5546052	1720-B	73
5546054	1722-B	73
5546056	1723-B	74
5546060	3005	74
5546062	3006	74
5546064	1728-B	74
5546066	1633	74
5546068	1743-B	74
5546070	321381	74
5546072	1952	74
5546074	1608-B	74
5546076	1699	74
5546078	1666	74
5546080	1992-B1	75
5546082	1646-B1	75
5546085	1968-S	72
5546086	1961-S	71
5546087	1966-S	71
5546088	1923-S	72
5546089	1969-S	72
5546090	1922-S	72
5546106	1792-B	71
5546108	1770-B1	72
5546110	1650	71
5546112	1184-B	76
5546114	A1186	76
5546116	1186-B	76
5546120	1820-1	77
5546122	1675-B	75
5546124	1815	76
5546126	1452	76
5546128	Z741-A	76
5546130	1851	75
5546132	43706	77
5546134	43716	77
5546135	51942	77
5546138	328224	78
5546140	328435	78
5546152	1611-B	72
5546153	1921-S	72
5546154		71
5546157	310912	77
5546159	51943	77
5546503	3016	71
5546507	3018	71
5547001		71
5547020		76
5547021		76
5547022		76
6110100		77

Ref.- No.: Alemite	UMETA	Page
1452	5546126	76
1633	5546066	74
1650	5546110	71
1666	5546078	74
1699	5546076	74
1815	5546124	76
1851	5546130	75
1952	5546072	74
3005	5546060	74
3006	5546062	74
3016	5546503	71
3018	5546507	71
43706	5546132	77
43716	5546134	77
51942	5546135	77
51943	5546159	77
1184-B	5546112	76
1186-B	5546116	76
1606-B	5546026	72
1607-B	5546010	71
1608-B	5546074	74
1610-BL	5546006	71
1611-B	5546152	72
1612-B	5546018	72
1613-B	5546024	72
1618-B	5546016	71
1623-B	5546020	72
1627-B	5546028	71
1637-B1	5546040	72
1641-B	5546030	71
1644-B	5546008	71
1646-B1	5546082	75
1649-B	5546022	72
1652-B	5546032	71
1669-B	5546012	71
1675-B	5546122	75
1680-B	5546034	71
1684-B	5546014	71
1688-B	5546017	72
1698-B	5546036	71
1720-B	5546052	73
1722-B	5546054	73
1723-B	5546056	74
1728-B	5546064	74
1743-B	5546068	74
1770-B1	5546108	72
1792-B	5546106	71
1820-1	5546120	77
1911-B1	5546044	72
1921-S	5546153	72
1922-S	5546090	72
1923-S	5546088	72
1961-S	5546086	71
1966-S	5546087	71
1968-S	5546085	72
1969-S	5546089	72
1992-B1	5546080	75
3010-B1	5546042	72
3014-B	5546038	71
3038-B	5546046	73
3053-B	5546048	73
3054-B	5546050	74
A1186	5546114	76
Z741-A	5546128	76
310912	5546157	77
321381	5546070	74
328224	5546138	78
328435	5546140	78
	5241043	74
	5546154	71
	5547001	71
	5547020	76
	5547021	76
	5547022	76
	6110100	77