REV	DESCRIPTION	BY	CHK	DATE	ECN / MPS
A	ENGINEERING RELEASE	SYM	ZM	2018/03/13	RN180059
B	ADD 631AG00033A	SYM	ZM	2019/01/28	RN190019
C	c1(7A) WAS 17.42~17.78;c3(3B),c2(5C) ADD DIMENSION	SYM	ZM	2021/06/11	RN210195
D	d1(6A) REVISE DIMENSION L	SYM	ZM	2022/06/29	RN220140
E	ADD 631AG00056A,57A,58A,59A,60A	SYM	YYR	2023/07/21	0230448

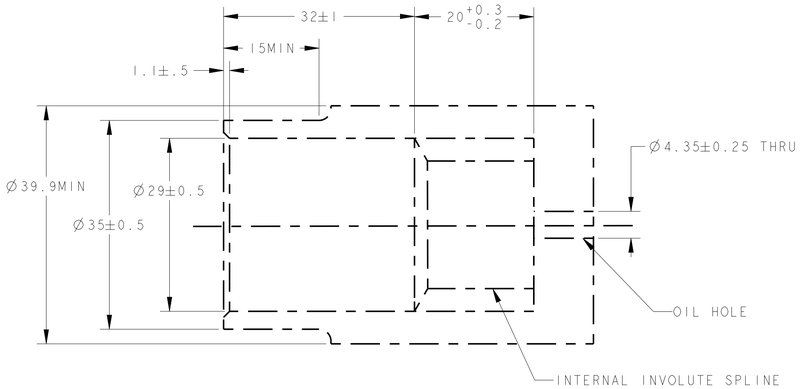

COUPING DIMENSION
SCALE 2:1

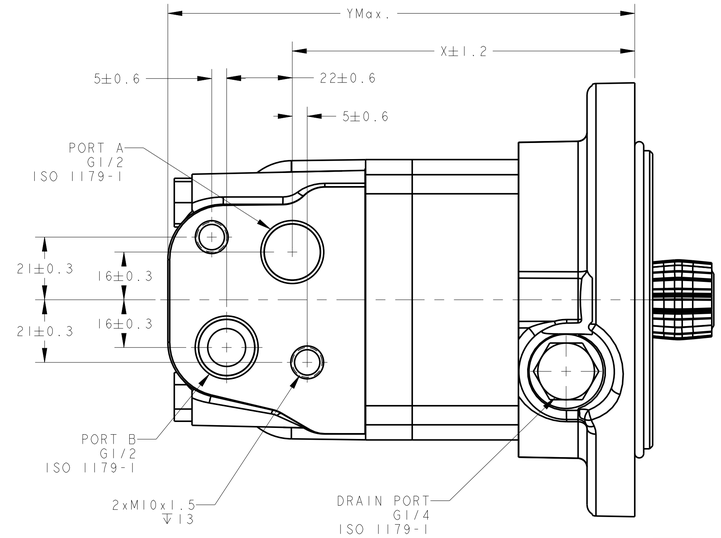

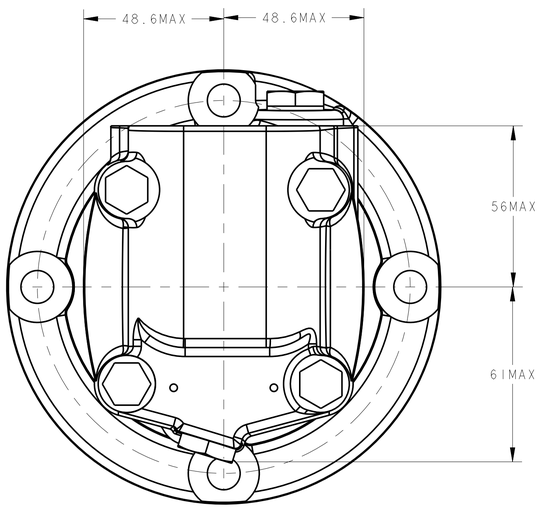

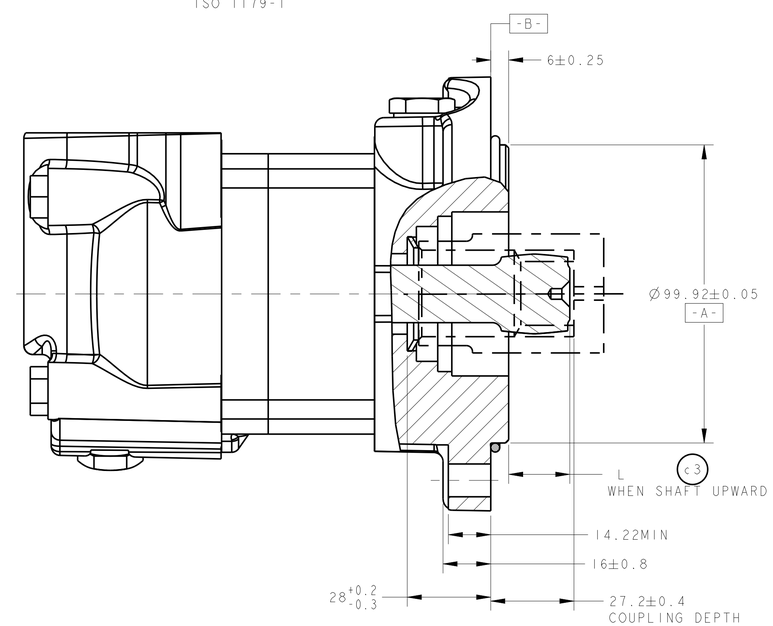

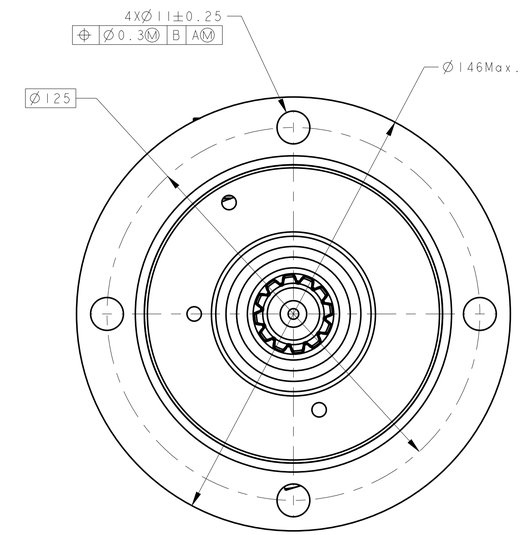

INTERNAL INVOLUTE SPLINE DATA	
SPLINE PITCH	12/24
PRESSURE ANGLE	30°
NUMBER OF TEETH	12
CLASS OF FIT	5
TYPE OF FIT	SIDE
PITCH DIAMETER-REF.	25.4
BASE DIAMETER-REF.	21.997045
MAJOR DIAMETER	27.94MAX,27.84MIN
MINOR DIAMETER	23~23.033
FORM DIAMETER MIN	27.69
FILLET RADIUS	0.2~0.33
TIP RADIUS	0.2~0.33
CIUCULAR SPACE WIDTH	
MAXIMUM ACTUAL	4.328
MINIMUM EFFECTIVE	4.247
MAXIMUM EFFECTIVE-REF.	4.277
MINIMUM ACTUAL-REF.	4.288
DIMENSION BETWEEN TWO PINS-REF.	17.622~17.784 (c1)
PIN DIAMETER	4.8326~4.8346

Part No.	Disp. (cc/r)	X(mm)	Y(mm)	L(mm) (d1)	Model code
631AG00056A	80	97	140.3	17.9~19.9	MC2080AZ39AS10000100002ABABAAB
631AG00025A	100	101.6	144.9	17.7~19.7	MC2100AZ39AS10000100002ABABAAB
631AG00026A	130	108.1	151.4	17.2~19.2	MC2130AZ39AS10000100002ABABAAB
631AG00033A	160	108.1	151.4	17.7~19.7	MC2160AZ39AS10000100002ABABAAB
631AG00057A	195	114.8	158.1	17.7~19.7	MC2195AZ39AS10000100002ABABAAB
631AG00058A	245	123.8	167.1	17.8~19.8	MC2245AZ39AS10000100002ABABAAB
631AG00059A	305	135.2	178.5	18.0~19.9	MC2305AZ39AS10000100002ABABAAB
631AG00060A	395	151.1	194.4	17.8~19.7	MC2395AZ39AS10000100002ABABAAB

NOTE:
1. INTERNAL SPLINE IN MATING PART TO BE PER SPLINE DATA SPEC
   MATERIAL TO BE 8620H
   CARBURIZE TO A HARDNESS OF 59~62 HRC WITH CASE DEPTH TO (50HRC)0.76~1.02
   DIMENSION APPLY AFTER HEAT TREAT
2. MATING PART TO HAVE CRITICAL DIMENSION AS SHOWN
   OIL HOLIES MUST BE PROVIDED AND OPEN FOR PROPER CIRCULATION
3. 27.6MAX DIMENSION TO BE MAINTAINED WHEN ASSEMBLING SHIPPING AND INSTALLATION UNIT TO INSURE VALVE DRIVE ENGAEMENT WITH VALVE
4. ROTATION:
   WHEN FACING SHAFT END OF MOTOR, SHAFT TO ROTATE:
   CLOCKWISE WHEN PORT "A" IS PRESSURIZED
   COUNTERCLOCKWISE WHEN PORT "B" IS PRESSURIZED

REVIEWED FOR CLASSIFICATION OF CHARACTERISTICS PER ESP-042

UNLESS OTHERWISE SPECIFIED ALL DIMENSIONS ARE IN
INCHES ☐
MILLIMETERS (INCHES) ☒

TOLERANCES
X. --
.X --
.XX --
∠ --

UNSPECIFIED RADII ARE: --

UNSPECIFIED DRAFT ANGLES ARE: --

D SIZE

DRAWING BASED ON ASME Y14.5M-2009

THE REPRODUCTION, DISTRIBUTION, AND UTILIZATION OF THIS DOCUMENT, AS WELL AS THE COMMUNICATION OF ITS CONTENTS TO OTHERS WITHOUT EXPLICIT AUTHORIZATION IS PROHIBITED. OFFENDERS WILL BE HELD LIABLE FOR THE PAYMENT OF DAMAGES. ALL RIGHTS RESERVED IN THE EVENT OF THE GRANT OF A PATENT, UTILITY MODEL, OR DESIGN. (PER ISO 16016)

Danfoss

DRAWN BY/DATE &DRAWN_BY &DATE1
CHECKED BY/DATE &CHKD_BY &DATE2
ENGRG BY/DATE &ENGR_BY &DATE3
METALURGY BY/DATE &METAL_BY &DATE4

MATERIAL/HEAT TREAT --

TITLE
INSTALLATION DRAWING

THIRD ANGLE PROJECTION

MICROINCHES ☐
MICROMETERS (MICROINCHES) ☒
&TB_SURF
ARITHMETICAL AVERAGE

DO NOT SCALE

NUMBER MC2XXXAZ39AS10000100002ABABAAB

SCALE 1/1 SHEET 1 OF 1