F64B, F64L, FFB64
Olympian Plus plug-in system
Ultra high efficiency coalescing filter

- Port size: 1/4" ... 3/4" (ISO G/PTF)
- F64B/F64L are 'triple function' products incorporating a pre-filter element, an oil removal element (bottom) and an oil vapour removal element (top)
- Ultra high efficiency coalescing filters with active carbon
- Very compact footprint due to three in one design
- Air purity class in accordance with ISO8573-1:2010: 1:7:0* *Tested in accordance with the methods laid out in ISO 12500-1 using an inlet oil aerosol concentration of 4mg/m^3

Remark:
These units do not remove carbon monoxide, carbon dioxide or other toxic gases or vapors.

Technical features

Medium:
Compressed air only

Function:
Stage 1: Pre-filter 40 µm
Stage 2: Coalescing filter 0,01 µm
Stage 3: Carbon element

Maximum operating pressure:
17 bar (246 psi)

Remaining oil content:
0,003 mg/m^3 max at +21ºC (+70°F)

Port sizes:
1/4", 3/8", 1/2" or 3/4"

Maximum flow at 6,3 bar (90 psi) inlet pressure:
F64B: 15.6 dm^3/s (33 scfm)
F64L: 16.3 dm^3/s (34.5 scfm)
To maintain stated oil removal performance

Drain:
Automatic

Automatic drain conditions:
Pressure to close drain:
> 0,3 bar (4.3 psi)
Pressure to open drain:
< 0,2 bar (2.9 psi)
Minimum air flow to close drain:
0,6 dm^3/s (1.3 scfm)

Ambient/Media temperature:
-20° ... +65°C (-4° ... +149°)
Air supply must be dry enough to avoid ice formation at temperatures below +2°C (+35°F).

Note:
Install an F64G filter with a 5 µm filter element upstream of the F64B/L filter for maximum service life.

Materials:
Body and yoke: Zinc alloy
Connection piece: Aluminium
Metal bowl: Aluminium
Pre filter element : Sinter bronze
Main filter element & activated carbon pack: Composite materials
Elastomers: NBR

Technical data, standard models

Symbol	Port size	Size	Drain	Weight (kg)	Model
	G1/4	–	Automatic	1,83	F64B-2GN-AR0
	G3/8	–	Automatic	2,21	F64L-3GN-AR0
	G1/2	Basic	Automatic	2,50	F64L-4GN-AR0
	G3/4	–	Automatic	2,88	F64L-6GN-AR0
	Without yoke	–	Automatic	1,59	F64B-NNN-ARO
	Without yoke	–	Automatic	1,59	F64L-NNN-ARO

Technical data F64B/L models with additional standard pre-filter F64G

Symbol	Port size	Size	Pre-filter element	Main filter	Drain	Weight (kg)	Model
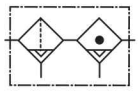	G1/4	–	F64G	F64B	Automatic	3,20	FFB64-208
	G3/8	–	F64G	F64L	Automatic	3,57	FFB64-308
	G1/2	Basic	F64G	F64L	Automatic	3,60	FFB64-408
	G3/4	–	F64G	F64L	Automatic	3,98	FFB64-608

Our policy is one of continued research and development. We therefore reserve the right to amend, without notice, the specifications given in this document. (1998 - 8076d) © 2020 Norgren GmbH

Option selector

F64★-★★N-★R0

Size	Substitute
1/4"	B
3/8" ... 3/4"	L

Port size	Substitute
1/4"	2
3/8"	3
1/2"	4
3/4"	6
No yoke	N

Drain	Substitute
Manual	M
Automatic (standard)	A

Thread	Substitute
PTF	A
ISO G parallel (standard)	G

Typical performance characteristics

Inlet pressure (bar)	Maximum flow (dm^3/s) * F64B	F64L
1	6,7	7,1
3	10,7	11,3
5	13,8	14,4
6,3	15,6	16,3
7	16,5	17,2
9	18,8	19,5

* Maximum flow to maintain stated oil removal performance.

Accessories

Thread	Models Single yoke	Double yoke	3/2 Shut-off valve Threaded inlet only	Threaded outlet only	End connector kit	Rear entry bracket kit
						8
G1/4	Y64A-2GA-N1N	Y64A-2GA-N2N	T64T-2GB-P1N	T64T-2GC-P1N	–	–
G3/8	Y64A-3GA-N1N	Y64A-3GA-N2N	T64T-3GB-P1N	T64T-3GC-P1N	–	–
G1/2	Y64A-4GA-N1N	Y64A-4GA-N2N	T64T-4GB-P1N	T64T-4GC-P1N	74505-50	–
G3/4	Y64A-6GA-N1N*	Y64A-6GA-N2N*	T64T-6GB-P1N	T64T-6GC-P1N	74505-53	18-026-981
1/4 PTF	Y64A-2AA-N1N	Y64A-2AA-N2N	T64T-2AB-P1N	T64T-2AC-P1N	–	–
3/8 PTF	Y64A-3AA-N1N	Y64A-3AA-N2N	T64T-3AB-P1N	T64T-3AC-P1N	–	–
1/2 PTF	Y64A-4AA-N1N	Y64A-4AA-N2N	T64T-4AB-P1N	T64T-4AC-P1N	74505-52	–
3/4 PTF	Y64A-6AA-N1N*	Y64A-6AA-N2N*	T64T-6AB-P1N	T64T-6AC-P1N	74505-55	–

*These yokes are supplied with two end connenctor kits as standard

Bracket mounting	Nut	Yoke connector kit	Porting block	Padlock with two keys
1	4	9		
74504-50	74502-89	74503-51	74507-50	0613633 (brass)

Service kit

Service kit F64B	Service kit F64L
F64B-KITA0V	F64L-KITA0V

Our policy is one of continued research and development. We therefore reserve the right to amend, without notice, the specifications given in this document. (1998 - 8076d) © 2020 Norgren GmbH

Basic dimensions

Dimensions in mm
Projection/First angle

F64B

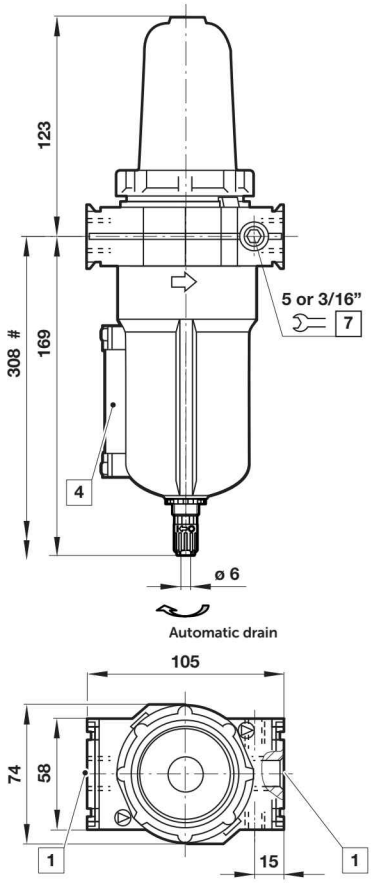

F64L

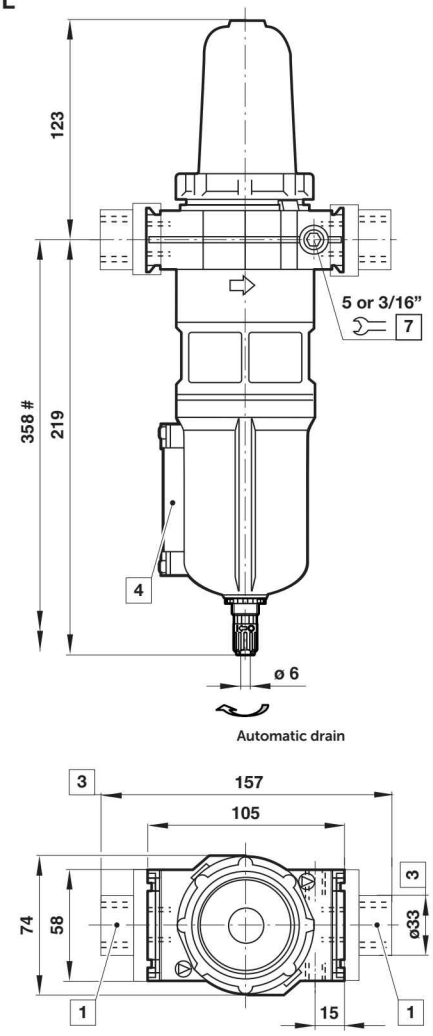

Minimum clearance required to remove bowl
1 Main ports 1/4", 3/8", 1/2" or 3/4"
3 For main ports 3/4" only
4 Sight glass
7 Gauge port 1/8"

Single yoke with bracket mounting

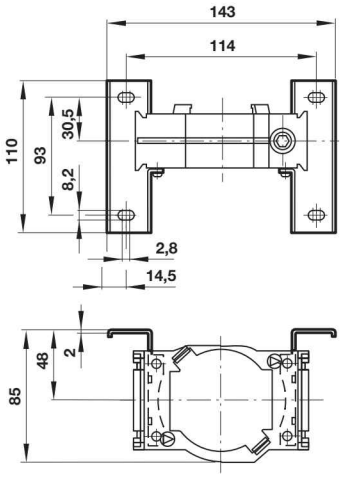

Double yoke with bracket mounting

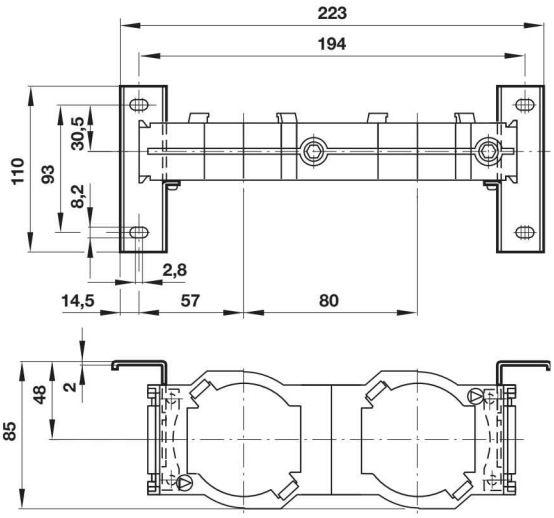

Our policy is one of continued research and development. We therefore reserve the right to amend, without notice, the specifications given in this document. (1998 - 8076d) © 2020 Norgren GmbH

Rear entry bracket
18-026-981

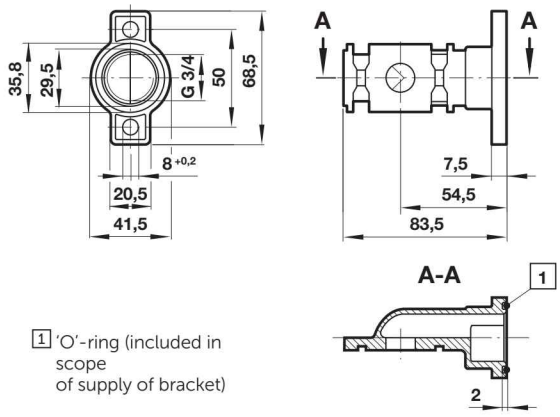

1 'O'-ring (included in scope of supply of bracket)

Porting block
74507-50

Dimensions in mm
Projection/First angle

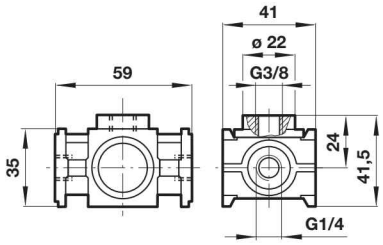

3/2 Shut-off valve

Symbol	A	B	ø C	Model
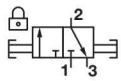	G1/4	48	27	T64T-2G*-P1N
	G3/8	48	27	T64T-3G*-P1N
	G1/2	48	27	T64T-4G*-P1N
	G3/4	51	33	T64T-6G*-P1N

* B = Threaded inlet only, C = Threaded outlet only

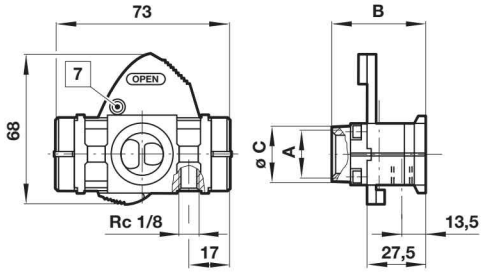

7 Padlock hole ø7,5 mm

Warning

These products are intended for use in industrial compressed air systems only. Do not use these products where pressures and temperatures can exceed those listed under **»Technical features/ data«.**
Before using these products with fluids other than those specified, for non-industrial applications, life-support systems or other applications not within published specifications, consult Norgren Ltd.
Through misuse, age, or malfunction, components used in fluid power systems can fail in various modes.

The system designer is warned to consider the failure modes of all component parts used in fluid power systems and to provide adequate safeguards to prevent personal injury or damage to equipment in the event of such failure.
System designers must provide a warning to end users in the system instructional manual if protection against a failure mode cannot be adequately provided.
System designers and end users are cautioned to review specific warnings found in instruction sheets packed and shipped with these products.

Our policy is one of continued research and development. We therefore reserve the right to amend, without notice, the specifications given in this document. (1998 - 8076d) © 2020 Norgren GmbH