WORKING CONDITIONS	DPX100
Max. work port flow	90 l/min
Max. inlet flow	120 l/min
Max. pressure P	300 bar
Max. pressure A,B	300 bar
Max. backpressure	30 bar
Stand-by pressure	14 bar
Fluid	Mineral based oil
Viscosity range	12 to 400 mm2/s
Seal material	NBR
Temperature range of the fluid	-20°C to +100°C
Enviromental temperature	-20°C to +50°C
Max. rate of contamination of the fluid	18/15 - ISO 4406

ELECTRICAL FEATURES	
Voltage	12VDC ±10 %
Resistence	4.72 Ohm ±5% at 20°C
Max. current	1.5A
Duty	S1(100%)

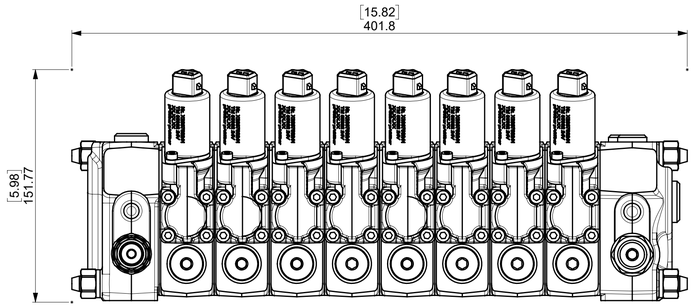

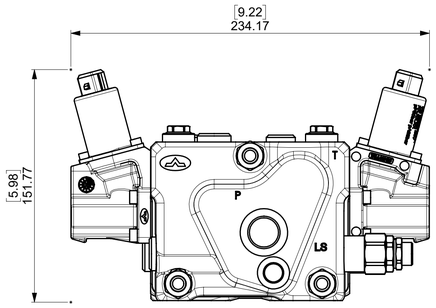

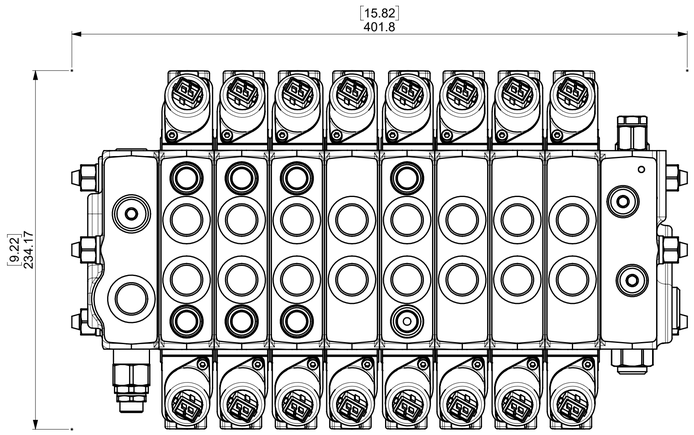

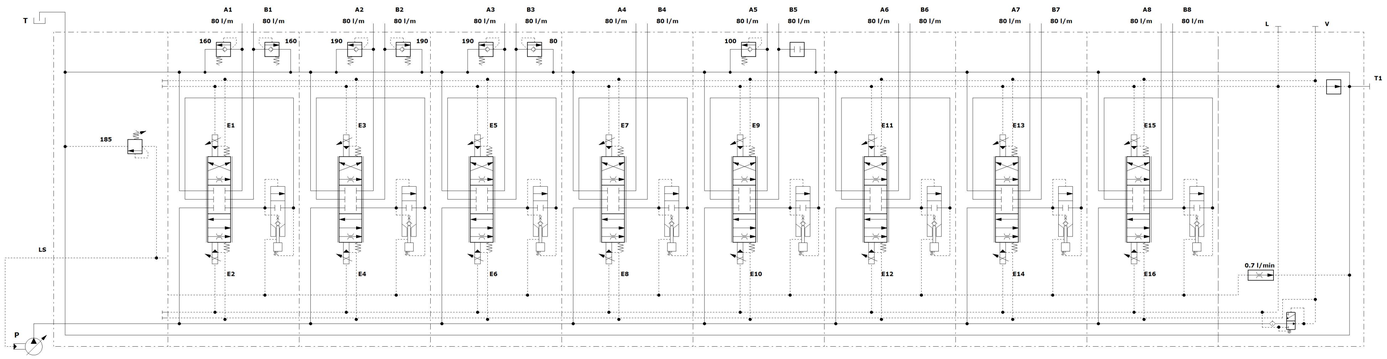

PORTS DIMENSIONS:

PORT	SIZE
P	BSP1/2
T	BSP1/2
T1	BSP1/2
VL	BSP1/4
AB	BSP1/2

For this drawing non-warranty exists, because it is build automatically.
Dimensions not shown, see technical documentation

Configuration Code
DPX100-HYDRASPECMA-27/4_17:28

Scale 1:1 A1-SW

Description :
DPX100/8/AN1(TGW3-185)/PE-E101(80\80)-8EB3T.U3(150-T160)/PE-E101(80\80)-8EB3T.U3(190)/PE-E101(80\80)-8EB3T.U1(190)U2(40-T80)/QE-E101(80\80)-8EB3T/PE-E101(80\80)-8EB3T.U1(80-T100)U2T/QE-E101(80\80)-8EB3T/QE-E101(80\80)-8EB3T/QE-E101(80\80)-8EB3T/RDR-BSP12(PABTT1)14(LS)-12VDC

walvoil

Date 27/4/26
Draw HYDRASPECMA

http://www.walvoil.com
e-mail: info@walvoil.com
REGGIO EMILIA - ITALY

All rights reserved