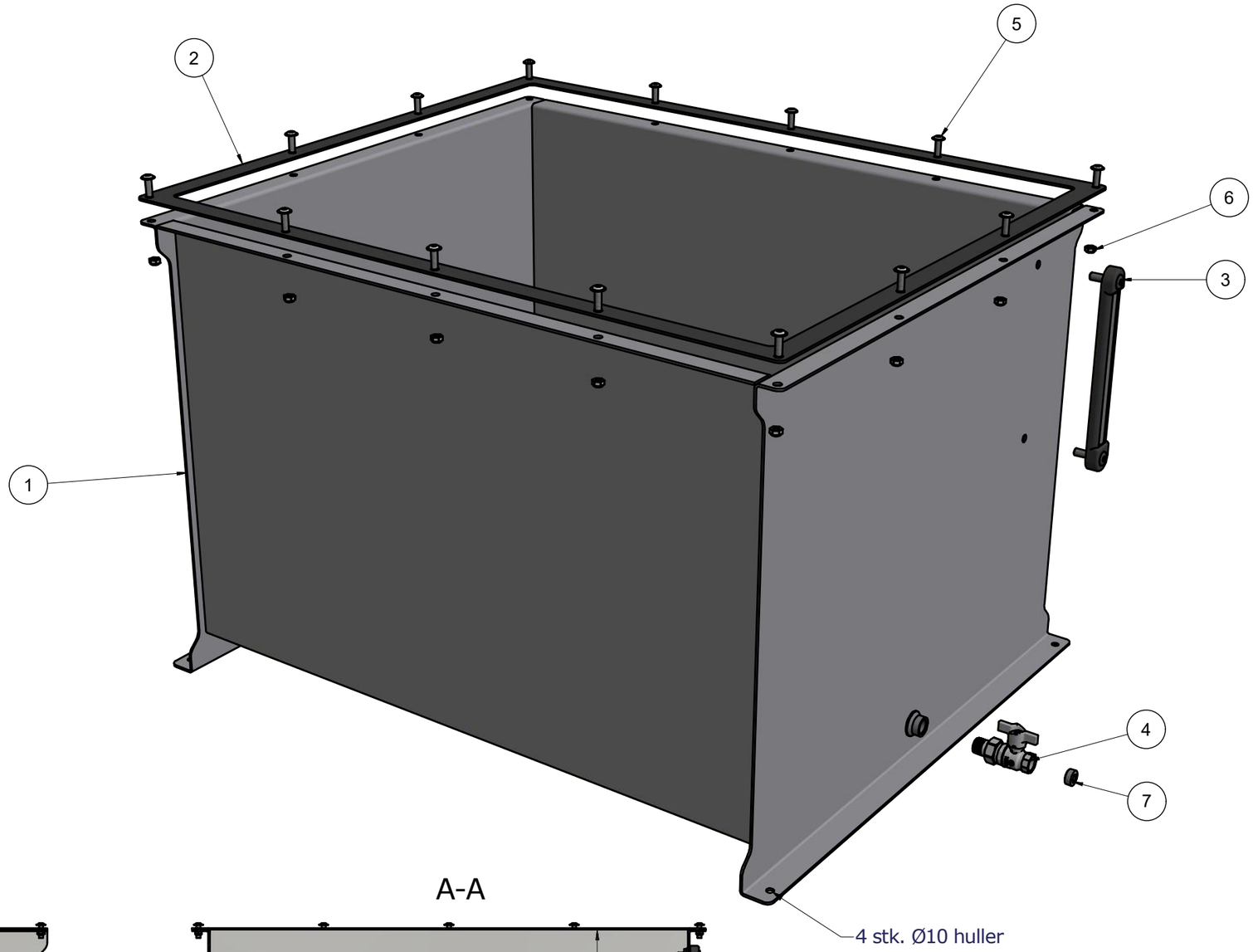

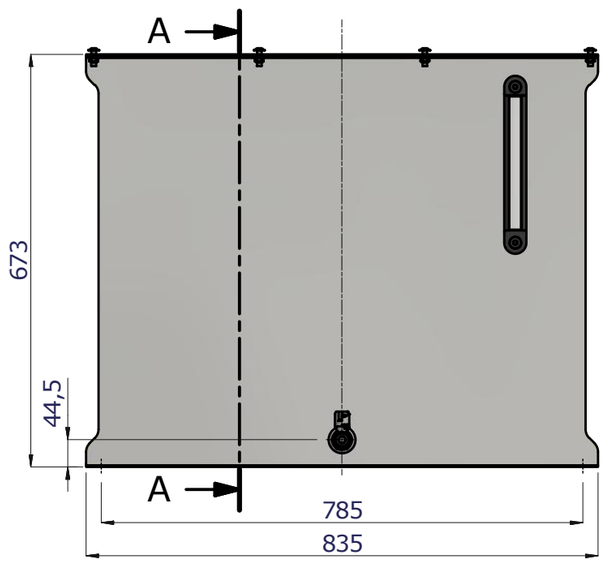

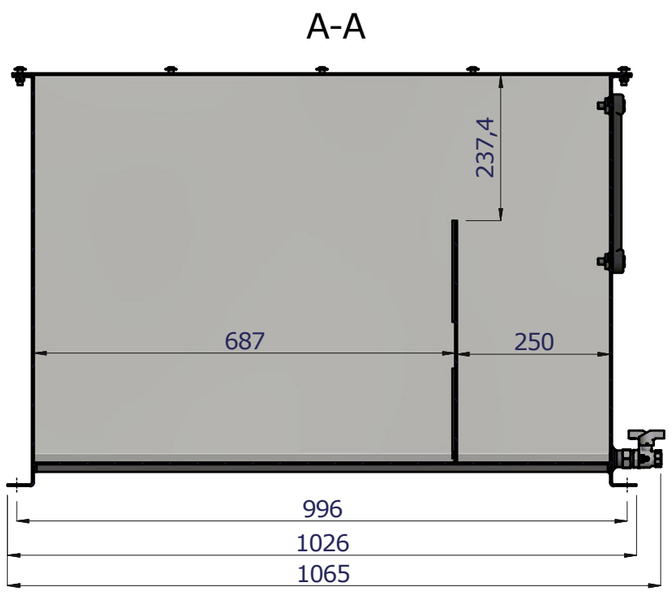

Parts List			
ITEM	QTY	PART NUMBER	DESCRIPTION
1	1	HGTA390	390 LITER TANK
2	1	HGTA390SK	SEAL FOR HGTA390
3	1	LVA30TAPM10	Oil level gauge 254/M10
4	1	KH52CE/3-004	Ball valve ½ inch
5	14	ULSF5408025	BUTTONHEAD ISO7381
6	14	9850208000	Lock nut DIN985-8 FZB
7	1	08BPU08-906	Plug 1/2 BSP without collar

HYDRA GRENE A/S
TLF. SKJERN: +45 97350599 / GREVE: +45 43970500 SE/CVR: 87552411
FAX SKJERN: +45 97353737 / GREVE: +45 43690010 WEB: www.hydra.dk

Kunde nr:	File navn:	Description:
	HGTA390KR00	HGTA 390L tank kpl. u/låg

Designed by	Date	Edition	Date	Sheet	Scale	Cost price:	
hero	11-09-2012		02-07-2018	1 / 1			A3