SEMIFLANGE INTERE

UNCUT SPLIT FLANGES

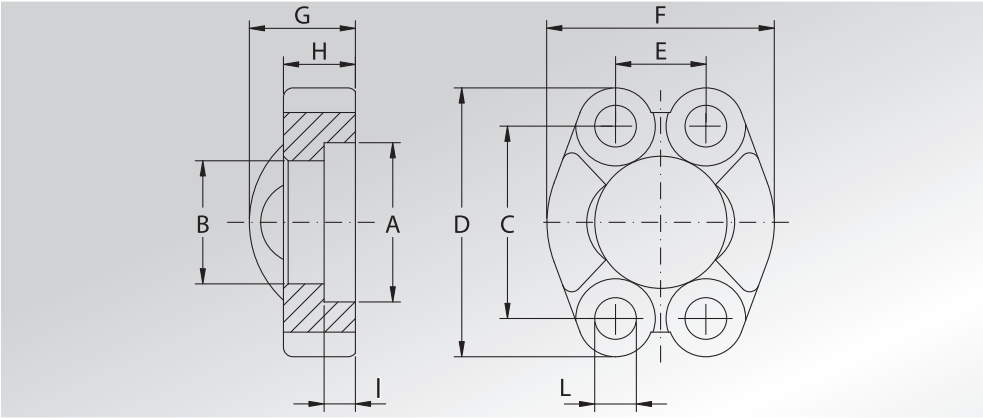

Pressione max di esercizio raccomandata Kg/cm²	Grandezza	Tipo	Dimensioni										Viti		Peso Kg
Maximum recommended working pressure Kg/cm²	*Size*	*Type*	*Dimensions*										*Screws*		*Weight Kg*
			A	B	C	D	E	F	G	H	I	L	Metric	Unc	
	SERIE 3000														
345	1/2"	AFSI301	30,96	24,26	38,10	54	17,48	45,6	19	13	6,22	8,75	M8x30	5/16x1"1/4	0,12
345	3/4"	AFSI302	38,89	32,13	47,63	65	22,23	51,8	22	14	6,22	10,75	M10x35	3/8x1"1/2	0,16
345	1"	AFSI303	45,24	38,48	52,37	70	26,19	58,4	24	16	7,49	10,75	M10x35	3/8x1"1/2	0,22
276	1"1/4	AFSI304	51,59	43,69	58,72	79	30,18	72,6	22	14	7,49	12,00	M10x35	—	0,30
276	1"1/4	AFSI304L1075	51,59	43,69	58,72	79	30,18	72,6	22	14	7,49	10,75	M10x35	—	0,30
276	1"1/4	AFSI304L1275	51,59	43,69	58,72	79	30,18	72,6	22	14	7,49	12,75	M12x35	—	0,30
207	1"1/2	AFSI305	61,09	50,80	69,85	94	35,71	82,2	25	16	7,49	13,50	M12x35	—	0,43
207	1"1/2	AFSI305L1475	61,09	50,80	69,85	94	35,71	82,2	25	16	7,49	14,75	M14x45	—	0,43
207	2"	AFSI306	72,24	62,74	77,77	102	42,88	96,4	26	16	9,02	13,50	M12x35	—	0,56
207	2"	AFSI306L1475	72,24	62,74	77,77	102	42,88	96,4	26	16	9,02	14,75	M14x45	—	0,54
172	2"1/2	AFSI307	84,94	74,93	88,90	114	50,80	108,2	38	19	9,02	13,50	M12x40	1/2x1"3/4	0,74
172	2"1/2	AFSI307L1475	84,94	74,93	88,90	114	50,80	108,2	38	19	9,02	14,75	M14x45	—	0,74
138	3"	AFSI308	102,39	90,93	106,38	135	61,93	130,6	41	22	9,02	16,75	M16x50	5/8x2"	1,30
34	3"1/2	AFSI309	115,10	102,36	120,65	152	69,85	139,0	28	22	10,72	17,00	M16x50	5/8x2"	1,27
34	4"	AFSI310	127,79	115,06	130,18	162	77,77	152,0	35	25	10,72	17,00	M16x50	5/8x2"	1,65
34	5"	AFSI311	153,19	140,46	152,40	184	92,08	180,0	41	28	10,72	17,00	M16x50	5/8x2"	2,50
	SERIE 6000														
414	1/2"	AFSI601	32,54	24,64	40,49	56	18,24	47,2	22	16	7,24	8,75	M8x30	5/16x1"1/4	0,16
414	3/4"	AFSI602	42,06	32,51	50,80	71	23,80	60,0	28	19	8,26	11,00	M10x35	3/8x1"1/2	0,34
414	1"	AFSI603	48,41	38,86	57,15	81	27,76	69,6	33	24	9,02	13,00	M12x45	—	0,51
414	1"	AFSI603L12	48,41	38,86	57,15	81	27,76	69,6	33	24	9,02	12,00	—	7/16x1"3/4	0,51
414	1"1/4	AFSI604	54,76	44,45	66,68	95	31,75	77,2	38	27	9,78	15,00	M14x45	—	0,80
414	1"1/4	AFSI604L13	54,76	44,45	66,68	95	31,75	77,2	38	27	9,78	13,50	M12x45	1/2x1"3/4	0,80
414	1"1/2	AFSI605	64,29	51,56	79,38	113	36,50	95,0	43	30	12,07	17,00	M16x50	5/8x2"	1,44
414	2"	AFSI606	80,16	67,56	96,82	133	44,45	113,8	52	37	12,07	21,00	M20x70	3/4x2"1/2	2,10

SEMIFLANGE PIATTE INTERE NON ZINCATE

UNCUT FLAT SPLIT FLANGES NOT ZINKED

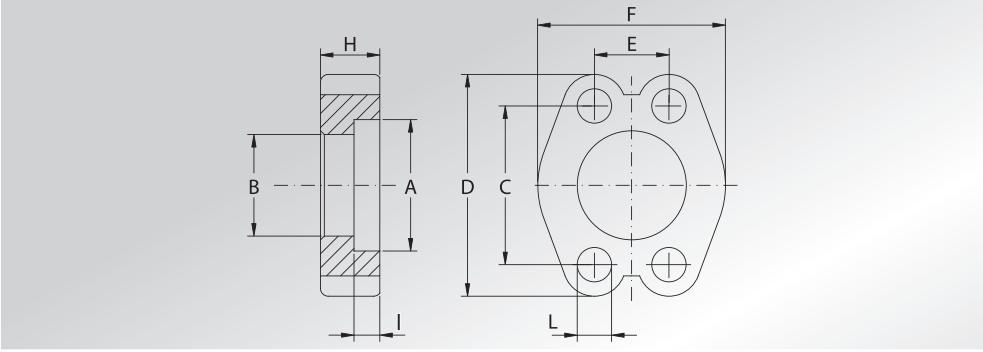

414	2"1/2"	AFPI607	89,50	108,50	123,80	180	58,70	152	–	45	20	26	M24x80	–	–
414	3"	AFPI608 (•)	114,50	132,50	152,40	208	71,40	178	–	55	25	33	M30x100	–	–

DESIGNAZIONE PER ORDINE *DESIGNATION FOR ORDER*	Materiale / *Material*	
	ST52.3	AISI 316L
Solo semiflangia intera / *Only uncut split flange*	**AFSI...**	**AFXI...**
Semiflangia intera completa di viti metriche, grower e o-ring *Uncut split flange complete of metric screws, grower type washers and o-ring*	**AFSI...M**	**AFXI...M**
Semiflangia intera completa di viti unc, grower e o-ring *Uncut split flange complete of unc screws, grower type washers and o-ring*	**AFSI...U**	**AFXI...U**

NOTE / *NOTES*

Rivestimento superficiale: zincatura.
Superficial coating: zinking.

set viti unc disponibili solo in acciaio al carbonio.
unc screws set available only in carbon steel.

(•) Minimo 20 pezzi
(•) Minimum 20 pieces