REV	DESCRIPTION	BY	CHK	DATE	MPS/ECR/ECO
A	ENGINEERING RELEASE	WH	YYR	20230704	RN230149

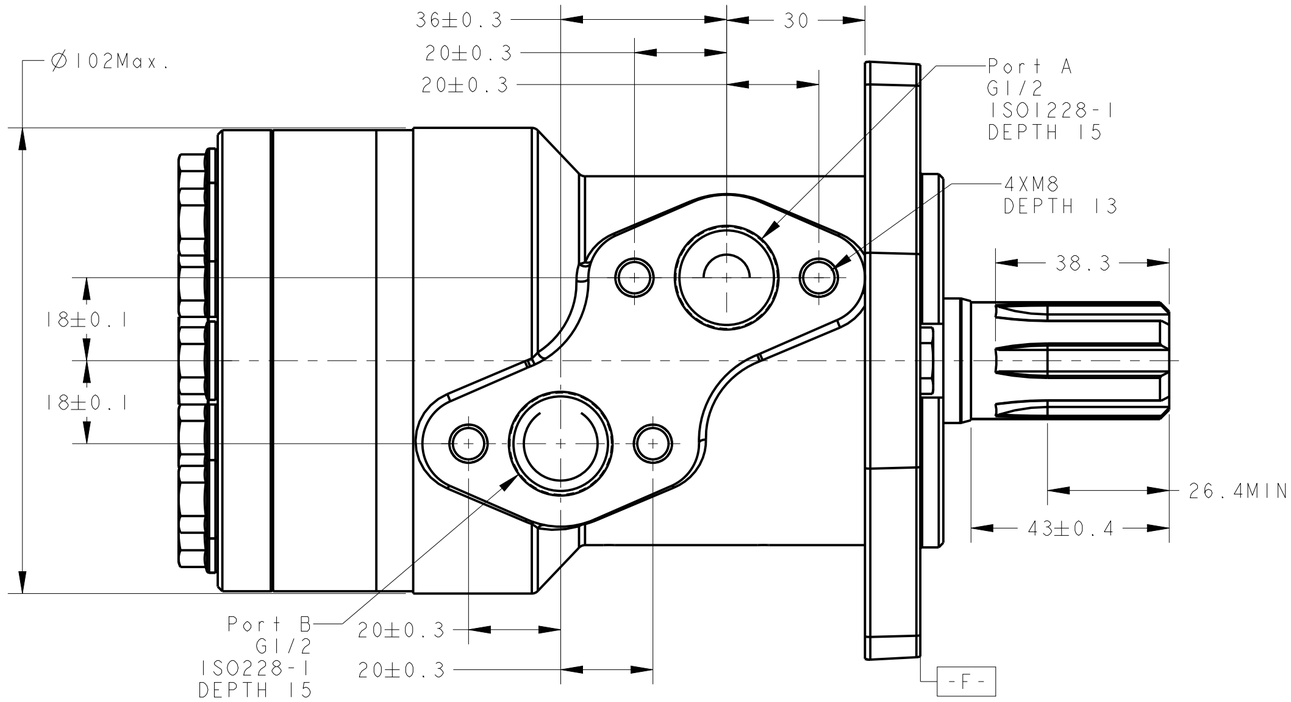

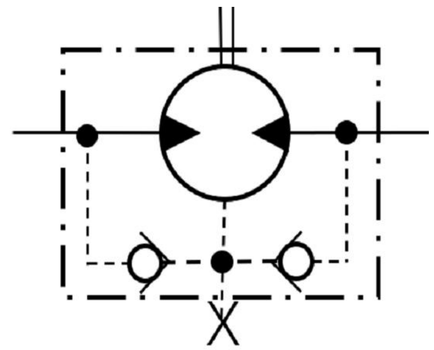

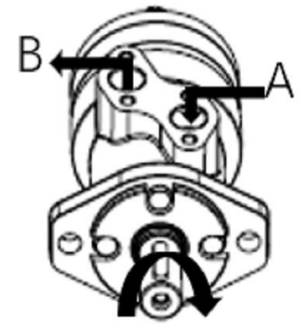

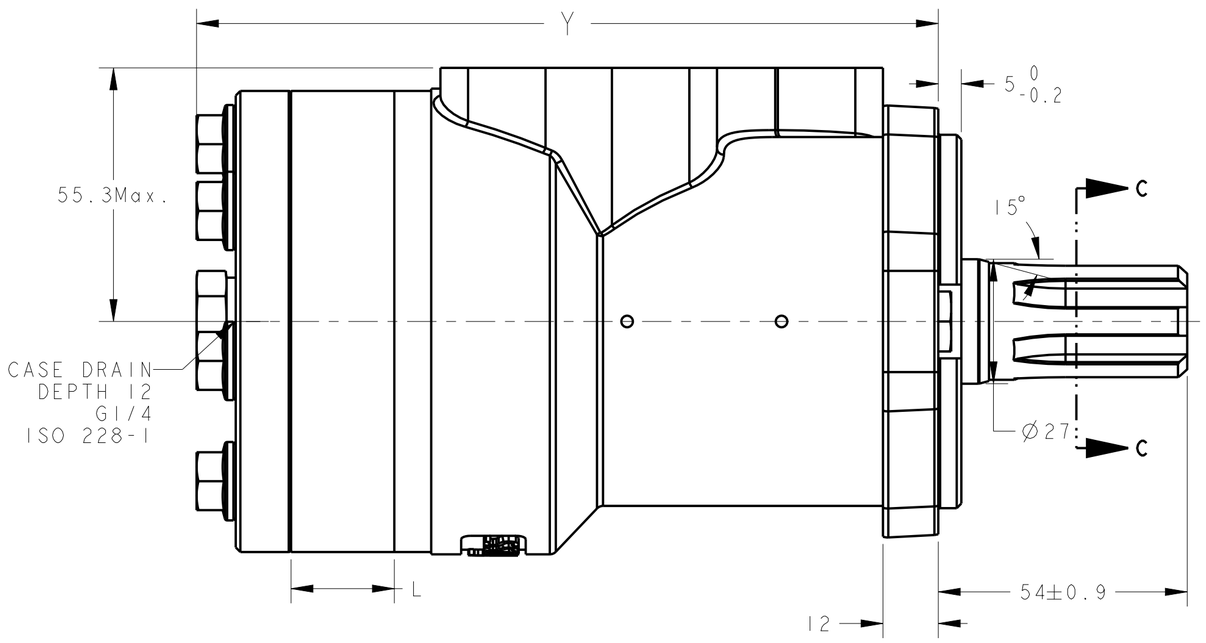

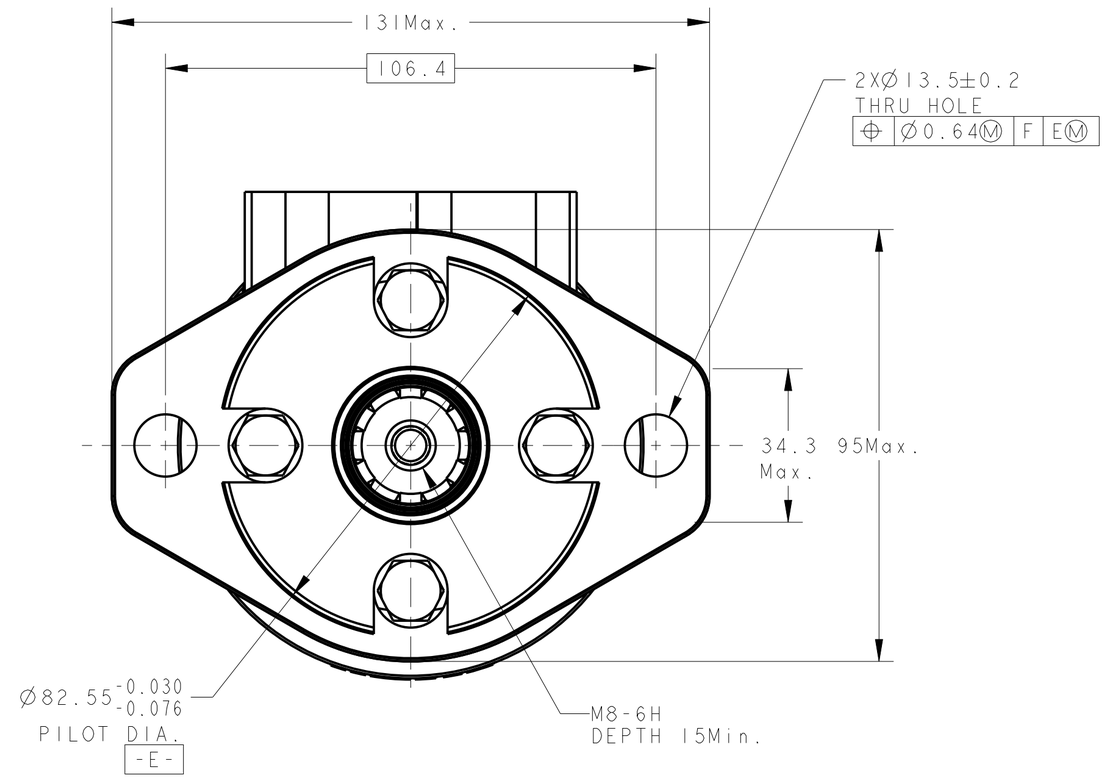

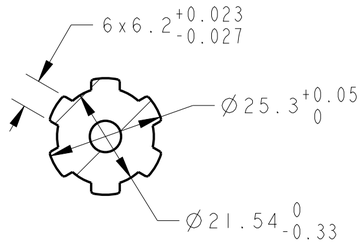

SECTION C-C
SCALE 1/1

PRODUCT NUM.	DIS. (cc/r)	YMAX (mm)	L	MODEL CODE
036-0497-003	50	151	11.2	MCS050AA07AA111020A000C00C
036-0498-003	80	158	17.8	MCS080AA07AA111020A000C00C
036-0499-003	100	163	22.4	MCS100AA07AA111020A000C00C
036-0500-003	130	169	28.9	MCS130AA07AA111020A000C00C
036-0501-003	160	169	28.9	MCS160AA07AA111020A000C00C
036-0502-003	195	176	35.6	MCS195AA07AA111020A000C00C
036-0503-003	245	185	44.6	MCS245AA07AA111020A000C00C
036-0504-003	305	196	56	MCS305AA07AA111020A000C00C
036-0505-003	395	212	72	MCS395AA07AA111020A000C00C

REVIEWED FOR CLASSIFICATION OF CHARACTERISTICS PER ESP-042

UNLESS OTHERWISE SPECIFIED ALL DIMENSIONS ARE IN
INCHES ☐
MILLIMETERS (INCHES) ☒

TOLERANCES
X. ± --
.X ± --
.XX ± --
∠ ± --

UNSPECIFIED RADII ARE: --

UNSPECIFIED DRAFT ANGLES ARE: --°

C SIZE

DRAWING BASED ON ASME Y14.5M-2009

THE REPRODUCTION, DISTRIBUTION, AND UTILIZATION OF THIS DOCUMENT, AS WELL AS THE COMMUNICATION OF ITS CONTENTS TO OTHERS WITHOUT EXPLICIT AUTHORIZATION IS PROHIBITED. OFFENDERS WILL BE HELD LIABLE FOR THE PAYMENT OF DAMAGES. ALL RIGHTS RESERVED IN THE EVENT OF THE GRANT OF A PATENT, UTILITY MODEL, OR DESIGN. (PER ISO 16016)

Danfoss

DRAWN BY/DATE --
CHECKED BY/DATE --
ENGRG BY/DATE --
METALLURGY BY/DATE --

MATERIAL/HEAT TREAT --

TITLE XLS Motor

THIRD ANGLE PROJECTION

DO NOT SCALE

MICROINCHES ☐
MICROMETERS (MICROINCHES) ☒
&TB_SURF
ARITHMETICAL AVERAGE

NUMBER MCSXXXAA07AA111020A000C00C

SCALE 1/1 SHEET 1 OF 1