REV	DESCRIPTION	BY	CHK	DATE	ECN / MPS
A	NEW RELEASE	YYR	SYM	20230703	RN230155

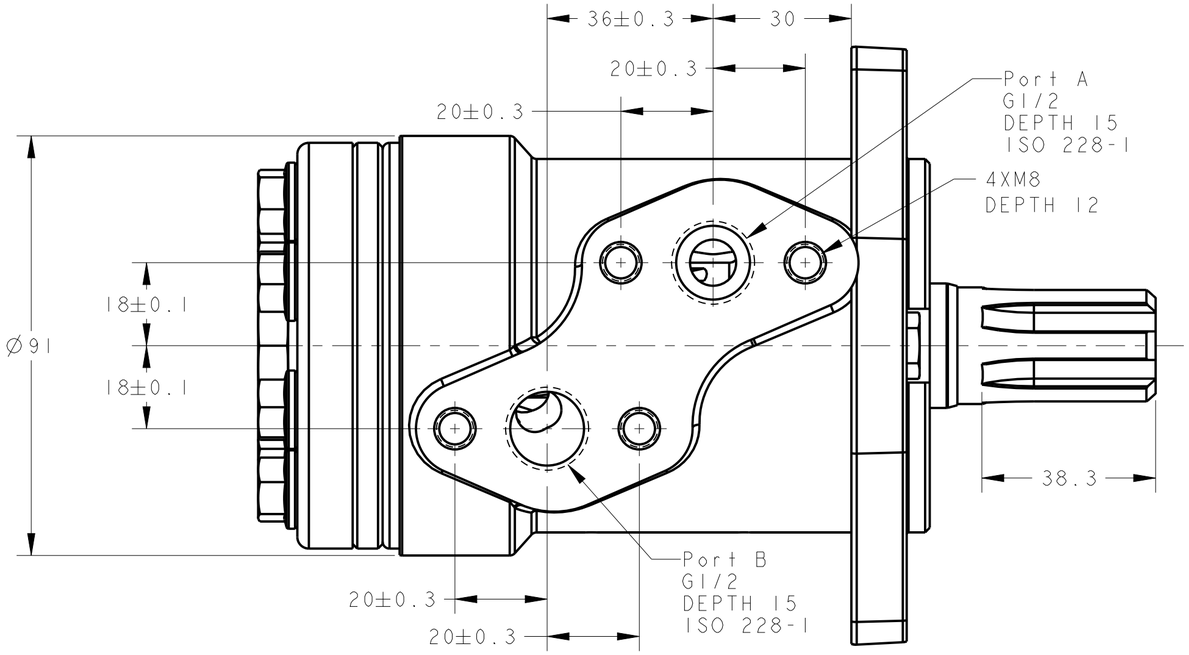

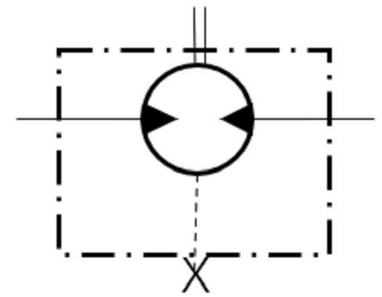

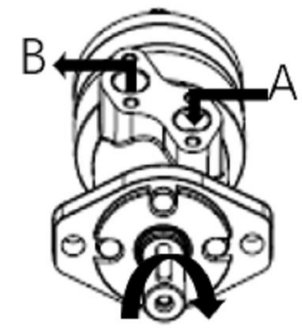

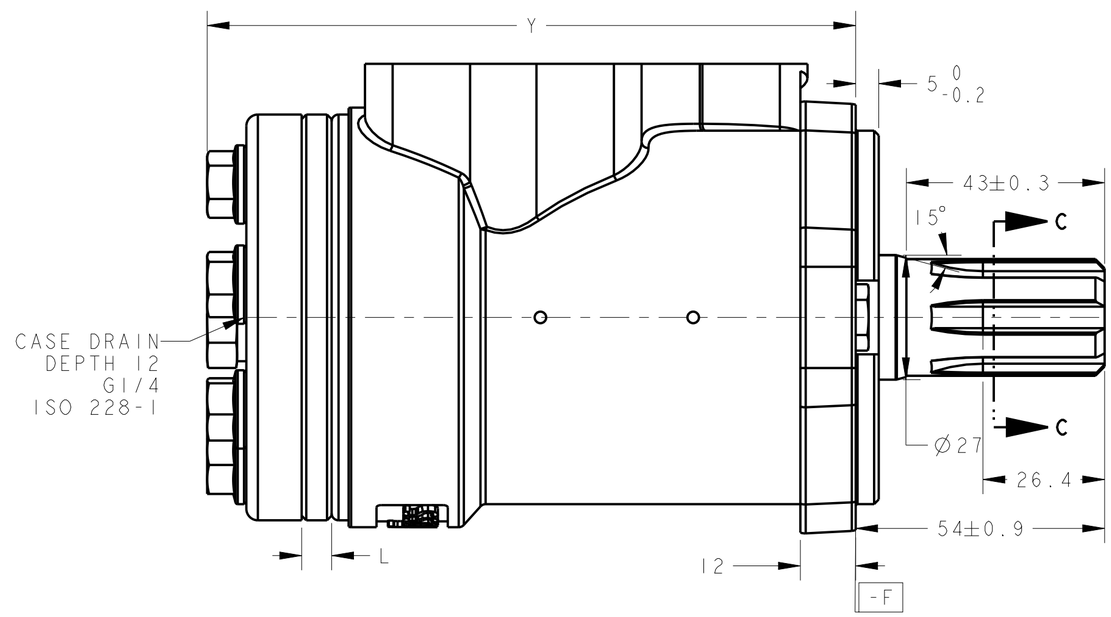

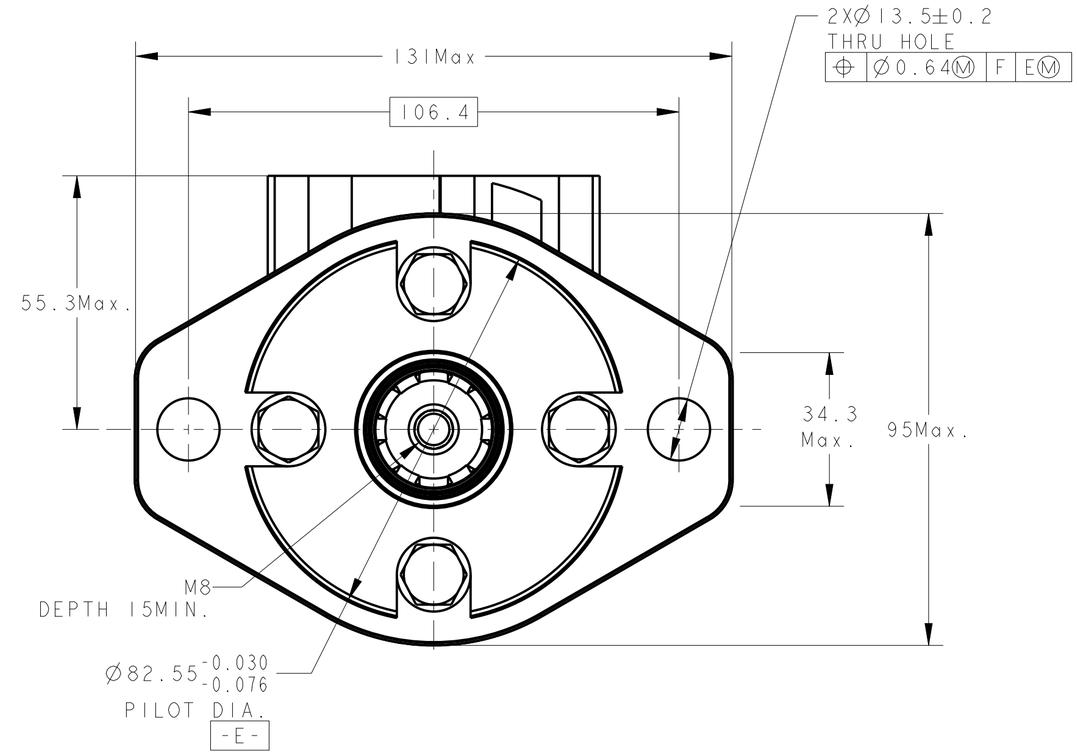

PRODUCT NUM.	DIS. (cc/r)	Y MAX (mm)	L mm	MODEL CODE
016-0531-003	053	144	7	MCH053AA07AA110020A000C00C
016-0532-003	063	146	8.5	MCH063AA07AA110020A000C00C
016-0533-003	080	148	10.5	MCH080AA07AA110020A000C00C
016-0534-003	100	150	13	MCH100AA07AA110020A000C00C
016-0535-003	125	153	16	MCH125AA07AA110020A000C00C
016-0536-003	160	158	21	MCH160AA07AA110020A000C00C
016-0537-003	200	163	26	MCH200AA07AA110020A000C00C
016-0538-003	245	169	32	MCH245AA07AA110020A000C00C
016-0539-003	315	179	42	MCH315AA07AA110020A000C00C
016-0540-003	390	189	52	MCH390AA07AA110020A000C00C
016-0541-003	485	201	64	MCH485AA07AA110020A000C00C

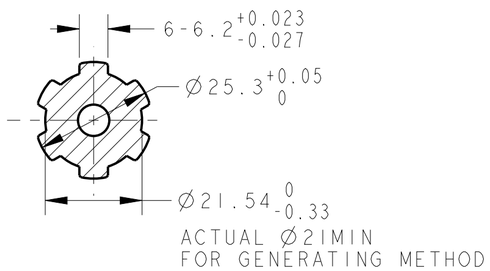

SECTION C-C

REVIEWED FOR CLASSIFICATION OF CHARACTERISTICS PER ESP-042

UNLESS OTHERWISE SPECIFIED ALL DIMENSIONS ARE IN
INCHES ☐
MILLIMETERS (INCHES) ☒

TOLERANCES
X. ± 0.5
.X ± 0.1
.XX ± 0.01
∠ ± 0.5°

UNSPECIFIED RADII ARE: &UNSP_RAD

UNSPECIFIED DRAFT ANGLES ARE: &UNSP_DRF°

C SIZE

DRAWING BASED ON ASME Y14.5M-2009

THE REPRODUCTION, DISTRIBUTION, AND UTILIZATION OF THIS DOCUMENT, AS WELL AS THE COMMUNICATION OF ITS CONTENTS TO OTHERS WITHOUT EXPLICIT AUTHORIZATION IS PROHIBITED. OFFENDERS WILL BE HELD LIABLE FOR THE PAYMENT OF DAMAGES. ALL RIGHTS RESERVED IN THE EVENT OF THE GRANT OF A PATENT, UTILITY MODEL, OR DESIGN. (PER ISO 16016)

Danfoss

DRAWN BY/DATE
CHECKED BY/DATE
ENGRG BY/DATE
METALLURGY BY/DATE

MATERIAL/HEAT TREAT

TITLE
XLH motor

THIRD ANGLE PROJECTION

DO NOT SCALE

MICROINCHES ☐
MICROMETERS (MICROINCHES) ☒
&TB_SURF
ARITHMETICAL AVERAGE

NUMBER
MCHXXXAA07AA110020A000C00C

SCALE 1/1 SHEET 1 OF 1