Hydraulik in-line filter



In-line filters guarantees a high degree of protection to the most delicate components in a hydraulic system. Placed into the branch of pressure they can withhold particles down to 10 micron nominal filtration.

These filters are normally applied in addition to the more traditional suction- or return line filters, as a last chance filter for protection of components such as directional valves, proportional valves, flowregulation valves and other components demanding high and efficient filtration of the hydraulic fluid.

The body is made from treated aluminium to obtain minimum size and weight.
The filterelement is made from sintered bronce in a konical shape to resist high pressure without collapsing.

Pressure >< flow

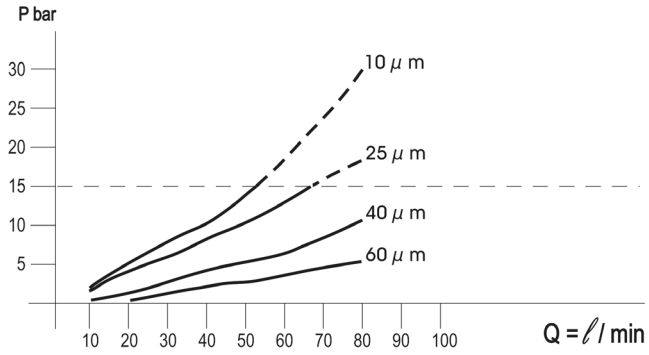

Test conditions:

Oil temperature:	20°C.
Viscosity:	190 cSt.
Thread (filter size):	1/2”
Max. working pressure:	350 bar.

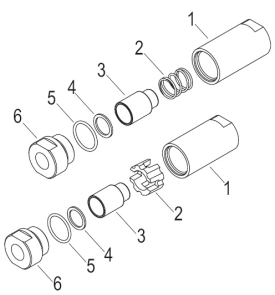

Description:

1 - Body
2 - Spring
3 - Filterelement
4 - Rubber washer
5 - O-ring OR3112
6 - Plug

Dimensions

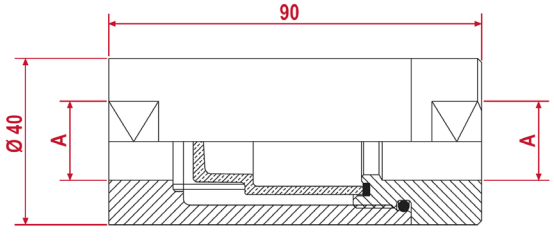

october 2009

With reservations to print errors, obsolete items, deviations in product photos or specifications.

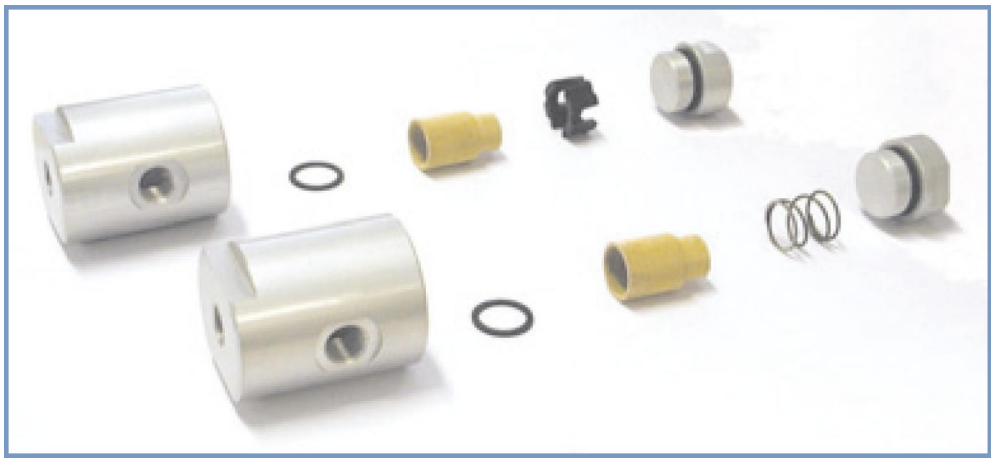

Hydraulik in-line "T-"filters (90°).

"T"-Filter has the same features of thi IN-LINE Filters with the advantage of the filering element, which can be removed for maintenance without having to disconnect the hoses or pies of the system, simply by removing the plug (pos. 6) of the filter itself.

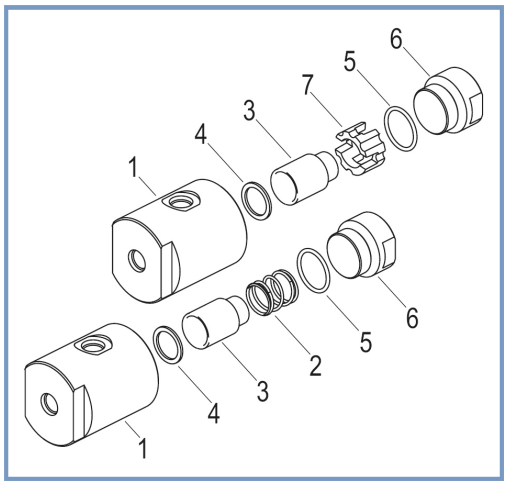

Description:

1 - Body
2 - Spring
3 - Filter element
4 - Rubber washer
5 - O-ring OR3112
6 - Plug
7 - Insert

Dimensions

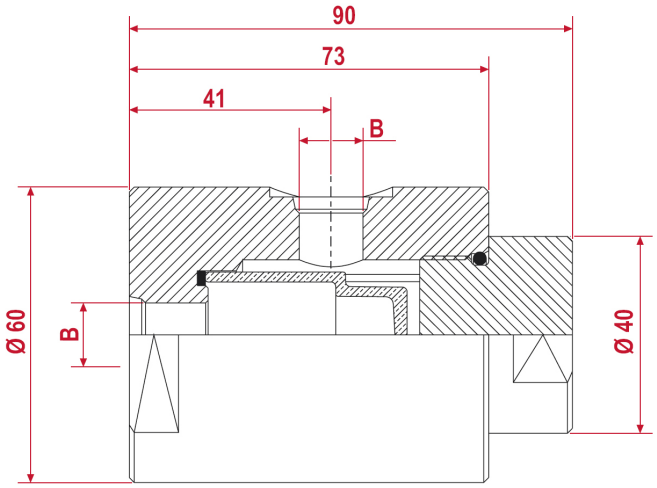

october 2009

With reservations to print errors, obsolete items, deviations in product photos or specifications.