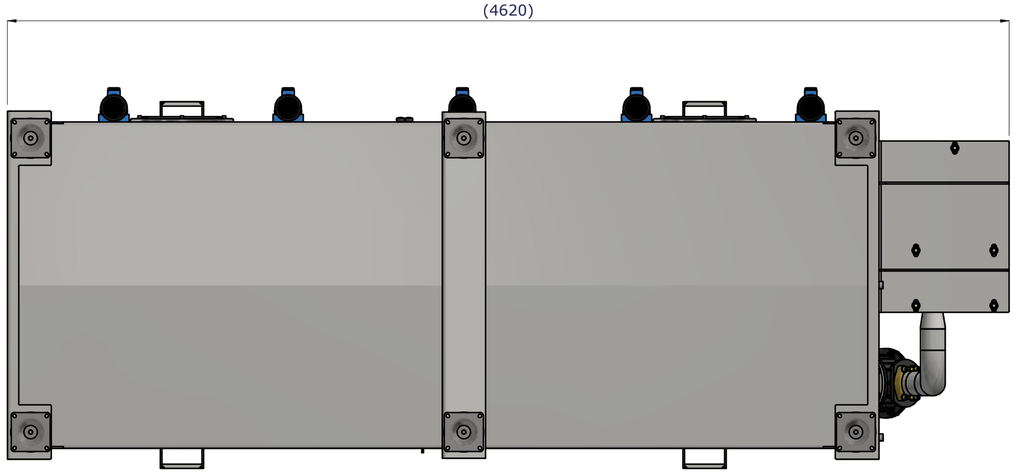

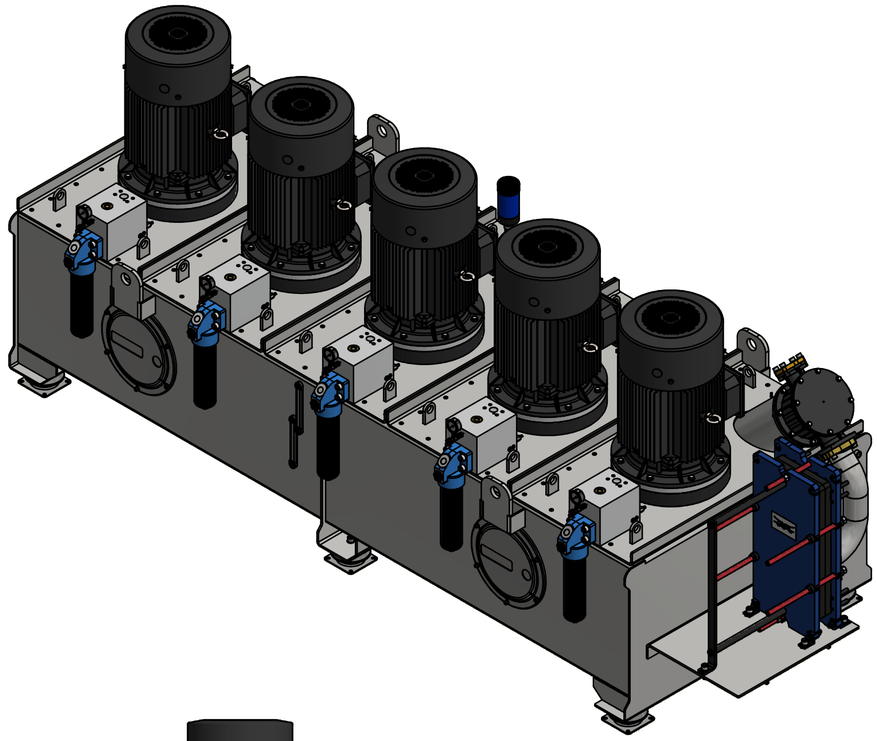

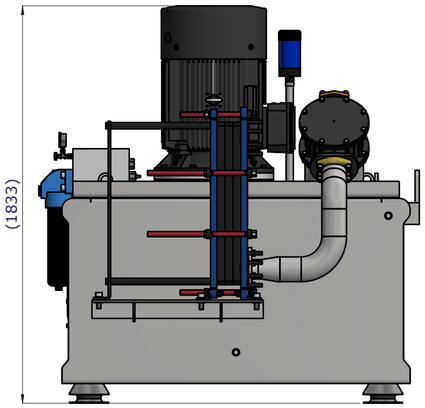

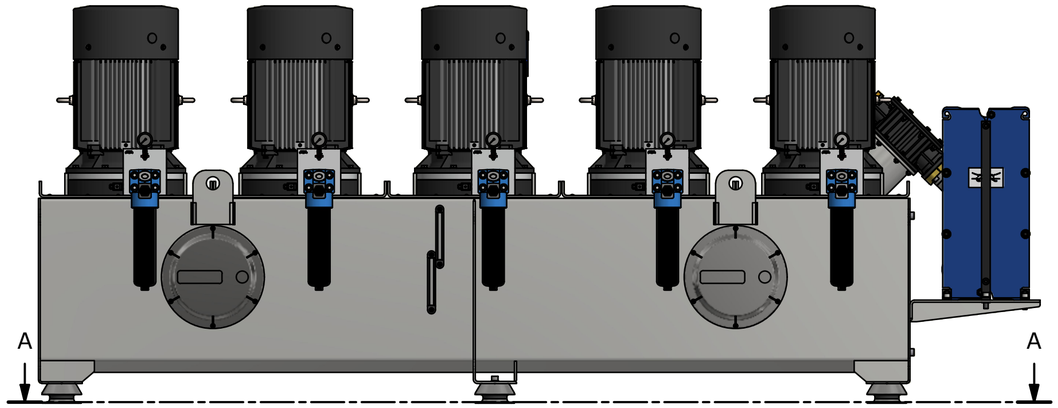

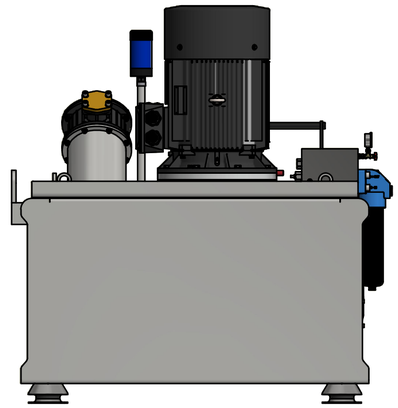

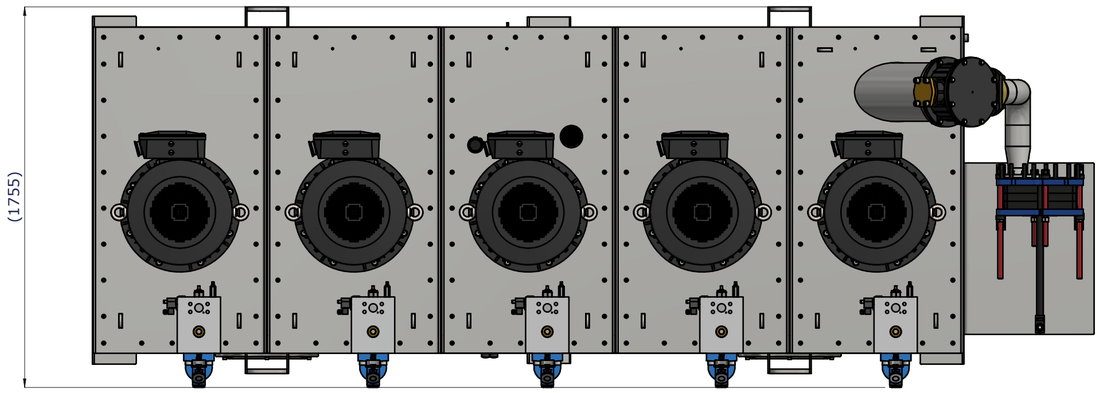

A-A (1 : 30)

FOOT PRINT

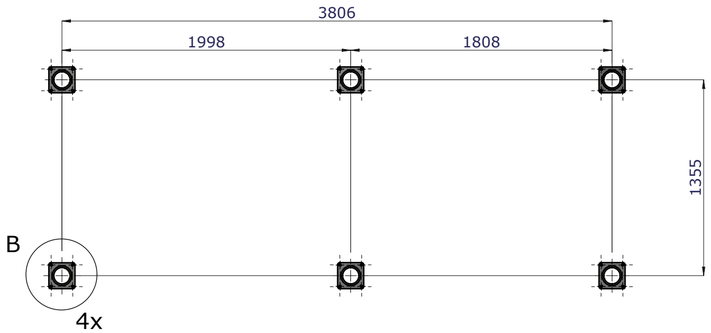

6x
B (1 : 10)

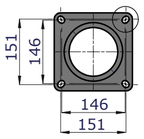

4x
C (1 : 4)

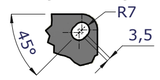

Weight: 4435,8 kg	Customer no.	Change no.	Created date: 24-03-2026	Created by: VIKA
Item description: 5x55 kW HPU			Reviewed date: 12-11-2026	Reviewed by: MANI
Hydra Specma	Format: A2 / Proj.	Drawing no.: 99999101		Sheet: 1 /2
	Status: Approved	Item no.: 99999101		Rev.: R00

Confidential information

This document is the property of HydraSpecma A/S and may not be copied or disclosed to any third party without prior written permission of HydraSpecma A/S.
HydraSpecma A/S reserves all patent, copyright, trade secret, and other proprietary rights to the content of this document.

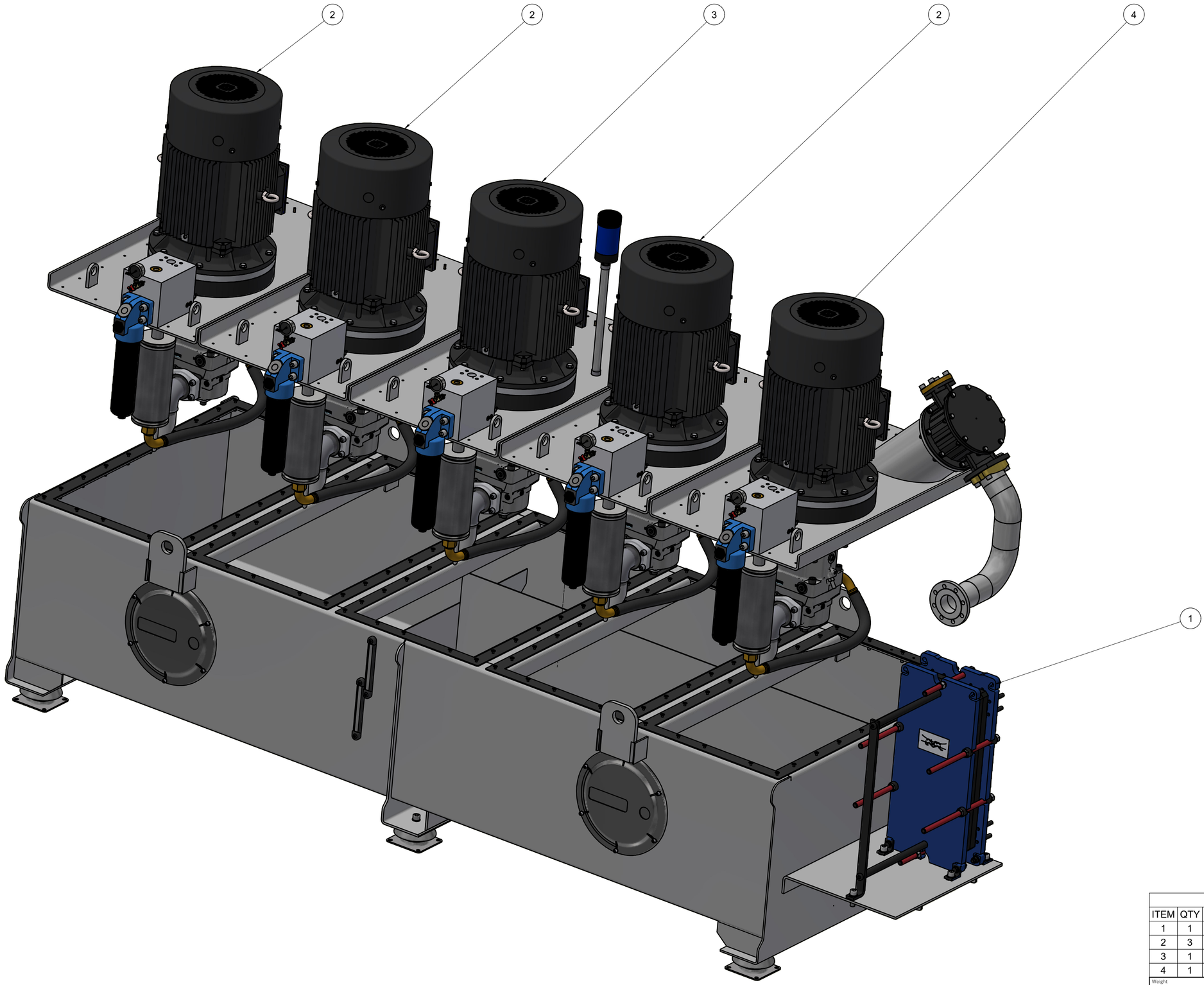

Parts List			
ITEM	QTY	PART NUMBER	DESCRIPTION
1	1	HGTA50001K00	Tank complete 5000 liter
2	3	HGTA5000L4KR0	Lid complete
3	1	HGTA5000L5KR0	Lid complete
4	1	HGTA5000L6KR0	Lid complete

Weight: N/A	Customer no.	Change no.	Created date: 24-03-2026	Created by: VIKA
Item description: 5x55 kW HPU			Reviewed date: 12-11-2026	Reviewed by: MANI
Hydra Specma	Format: A2	Proj.	Drawing no.: 99999101	Sheet: 2 /2
	Status: Approved		Item no.: 99999101	Rev.: R00

Confidential information
This document is the property of HydraSpecma A/S and may not be copied or disclosed to any third party without prior written permission of HydraSpecma A/S.
HydraSpecma A/S reserves all patent, copyright, trade secret, and other proprietary rights to the content of this document.